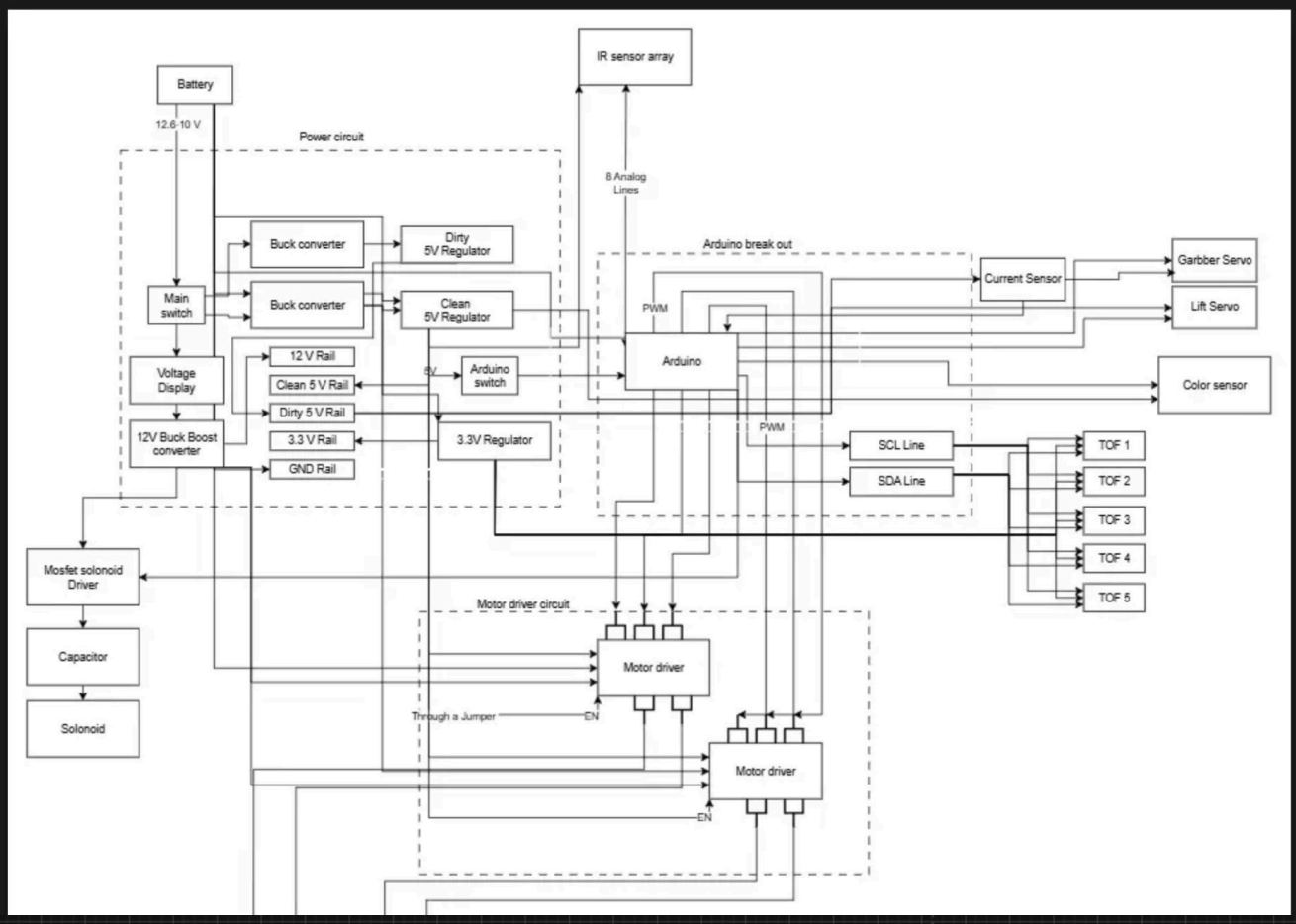
Battery
12.6-10 V
Power circuit
IR sensor array
8 Analog Lines
Buck converter
Dirty 5V Regulator
Main switch
Buck converter
Clean 5V Regulator
Arduino break out
Current Sensor
Garbber Servo
Lift Servo
PWM
Arduino
Voltage Display
12 V Rail
Clean 5 V Rail
5V
Arduino switch
Color sensor
Dirty 5 V Rail
12V Buck Boost converter
3.3 V Rail
3.3V Regulator
GND Rail
PWM
SCL Line
SDA Line
TOF 1
TOF 2
TOF 3
TOF 4
TOF 5
Mosfet solonoid Driver
Capacitor
Solonoid
Motor driver circuit
Motor driver
Through a Jumper
EN
Motor driver
EN

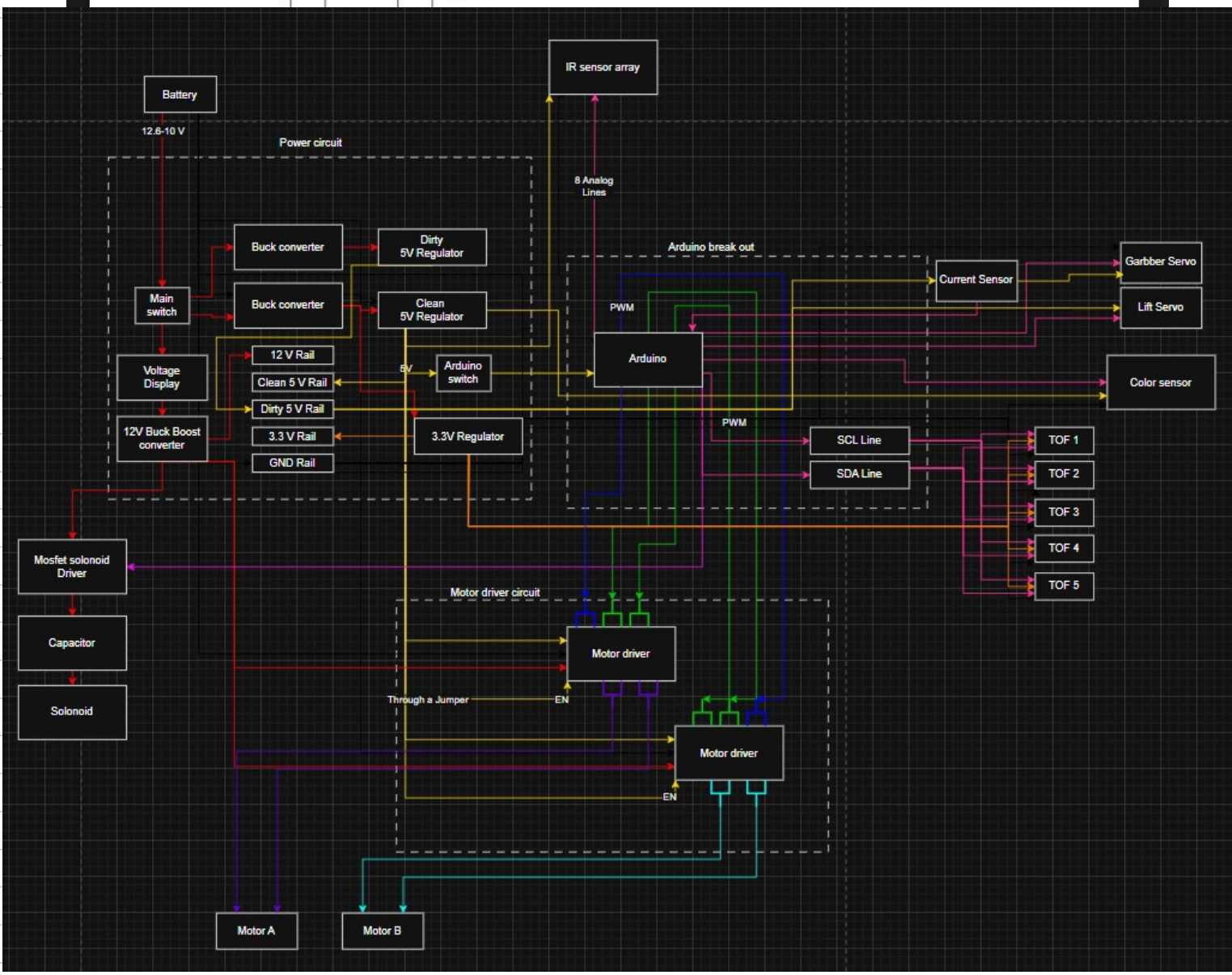
Battery
12.6-10 V
Power circuit
IR sensor array
8 Analog Lines
Buck converter
Dirty 5V Regulator
Main switch
Buck converter
Clean 5V Regulator
Arduino break out
Current Sensor
Garbber Servo
Lift Servo
PWM
Arduino
Voltage Display
12 V Rail
Clean 5 V Rail
5V
Arduino switch
Color sensor
Dirty 5 V Rail
12V Buck Boost converter
3.3 V Rail
3.3V Regulator
GND Rail
PWM
SCL Line
SDA Line
TOF 1
TOF 2
TOF 3
TOF 4
TOF 5
Mosfet solonoid Driver
Capacitor
Solonoid
Motor driver circuit
Motor driver
Through a Jumper
EN
Motor driver
EN
Motor A
Motor B

ARDUINO MEGA 2560 REV3

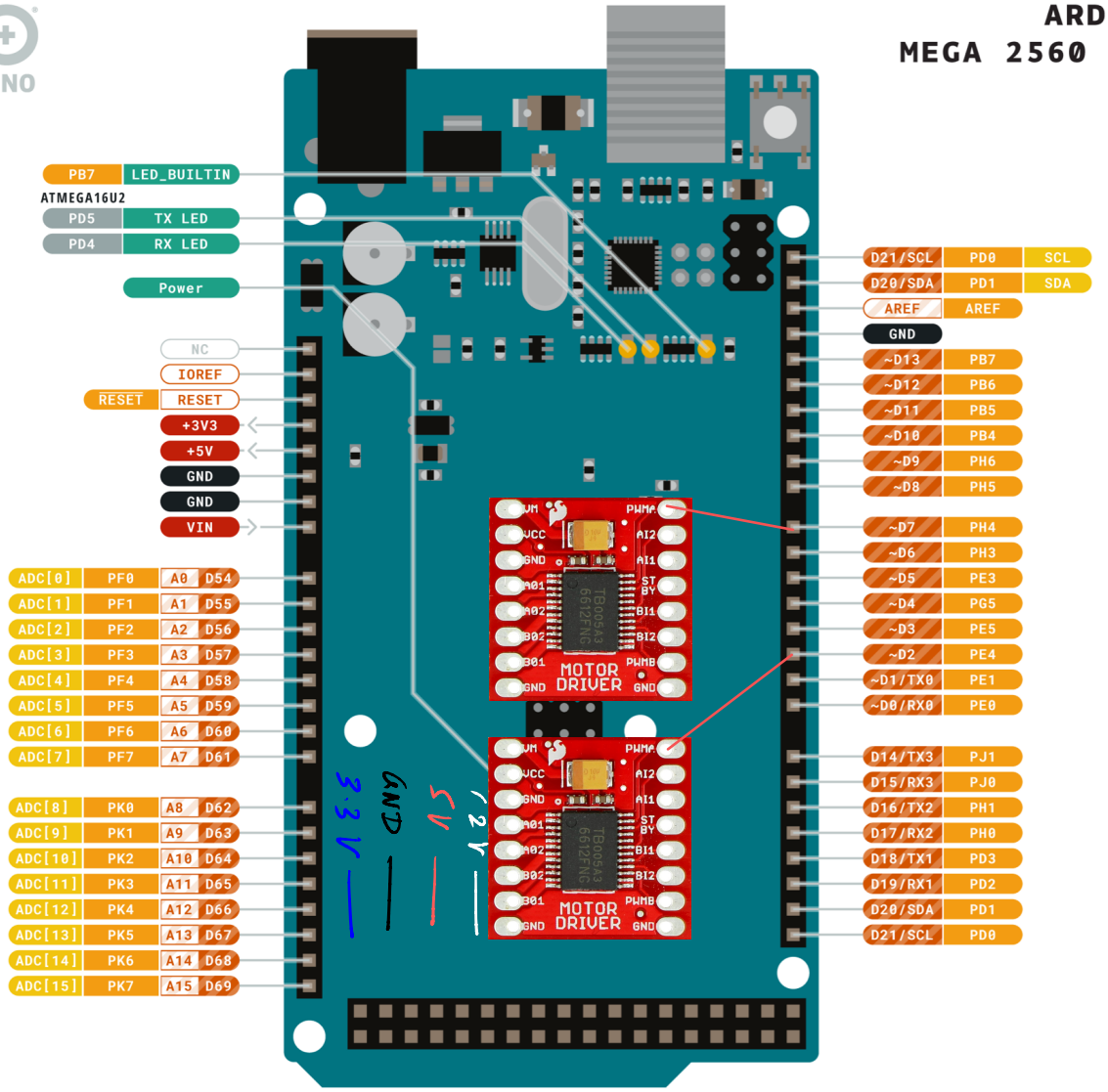

Ground	Internal Pin	Digital Pin	Microcontroller's Port
Power	SWD Pin	Analog Pin	
LED	Other Pin	Default	

ARDUINO.CC

This work is licensed under the Creative Commons Attribution-ShareAlike 4.0 International License. To view a copy of this license, visit http://creativecommons.org/licenses/by-sa/4.0/ or send a letter to Creative Commons, PO Box 1866, Mountain View, CA 94042, USA.

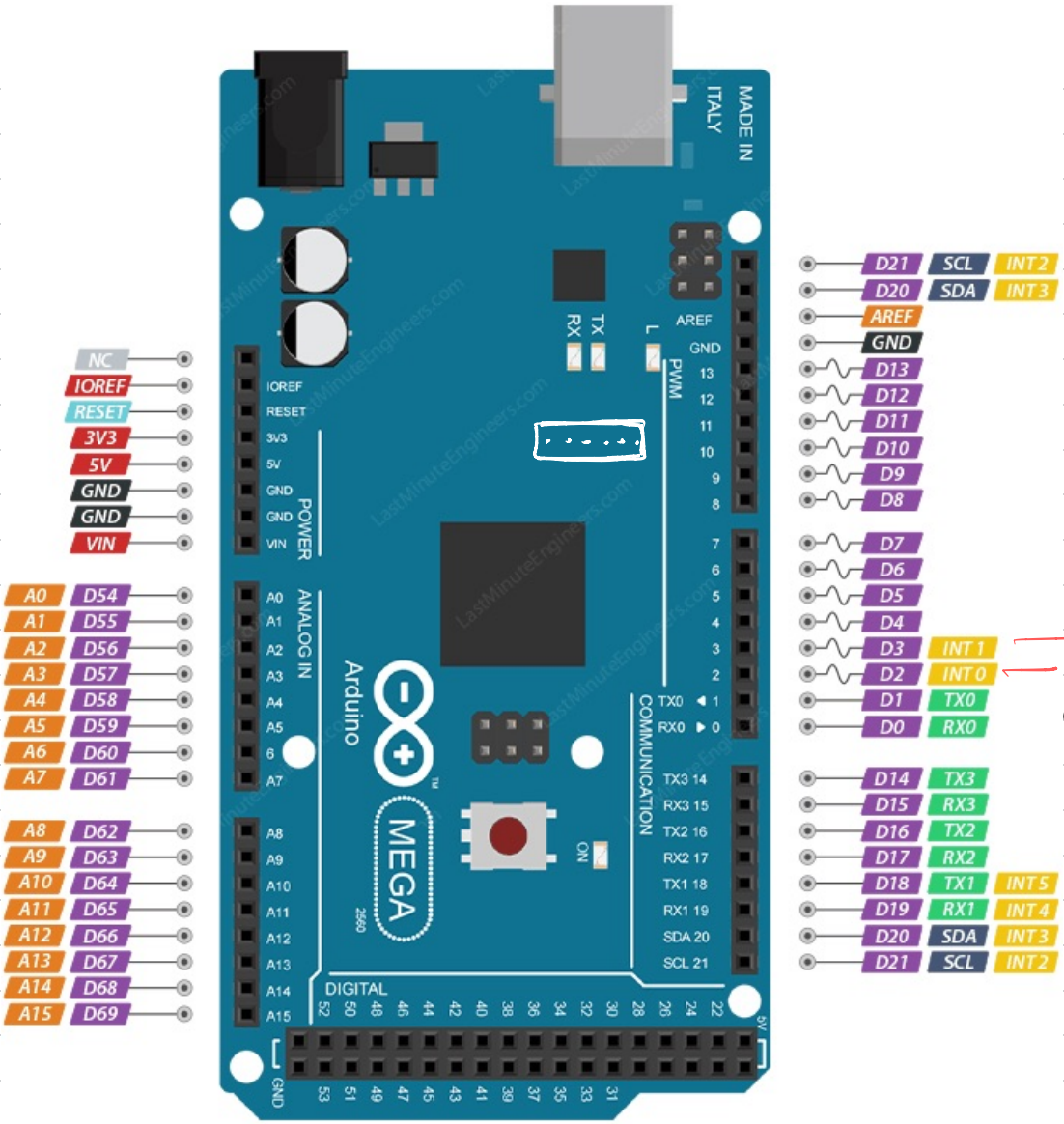

eers.com/wp-content

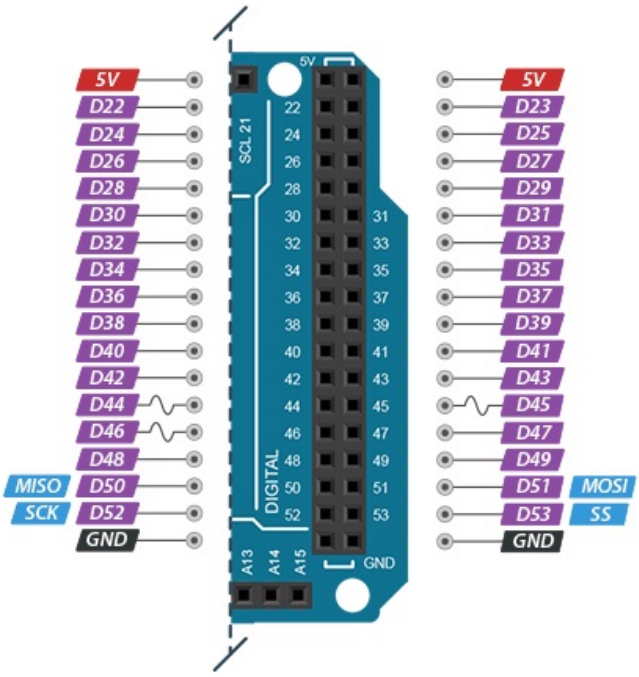

Power GND GPIO SPI I2C Interrupt
ADC Control UART NC PWM

Arduino Mega 2560 Pinout

Last Minute ENGINEERS.com

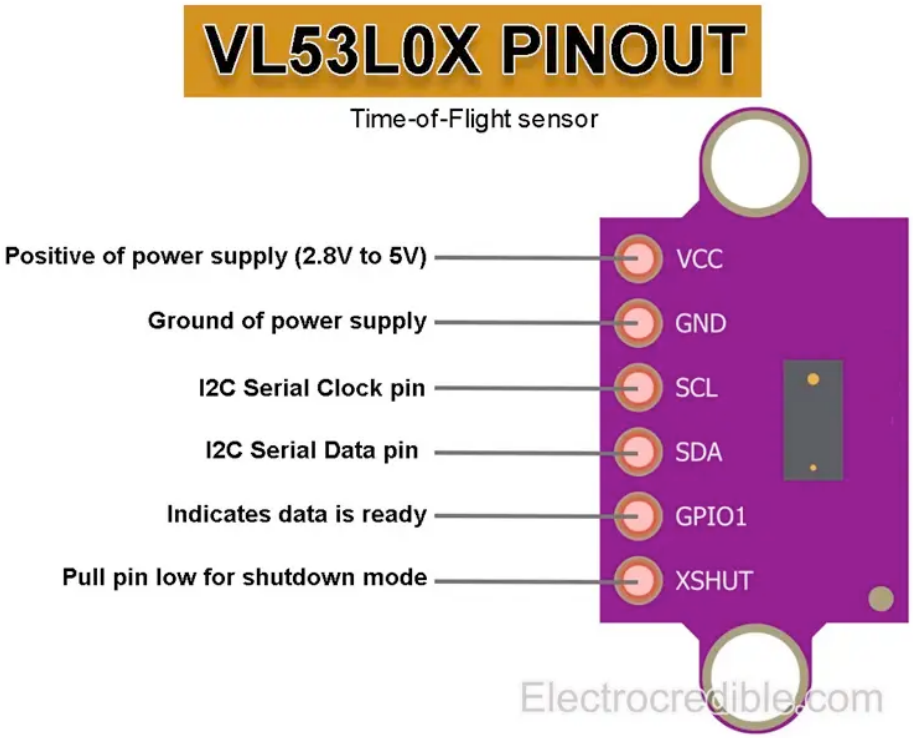
VL53L0X PINOUT
Time-of-Flight sensor
Positive of power supply (2.8V to 5V)
Ground of power supply
I2C Serial Clock pin
I2C Serial Data pin
Indicates data is ready
Pull pin low for shutdown mode
VCC
GND
SCL
SDA
GPIO1
XSHUT
Electrocredible.com

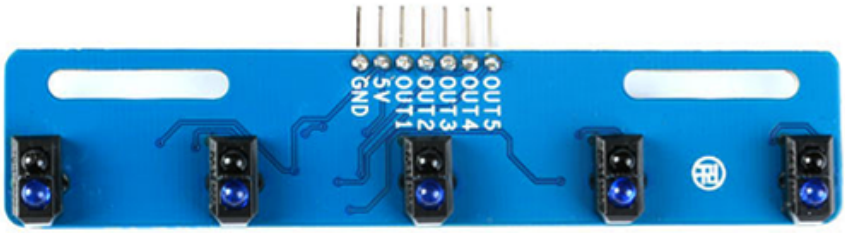
GND
5V
OUT1
OUT2
OUT3
OUT4
OUT5

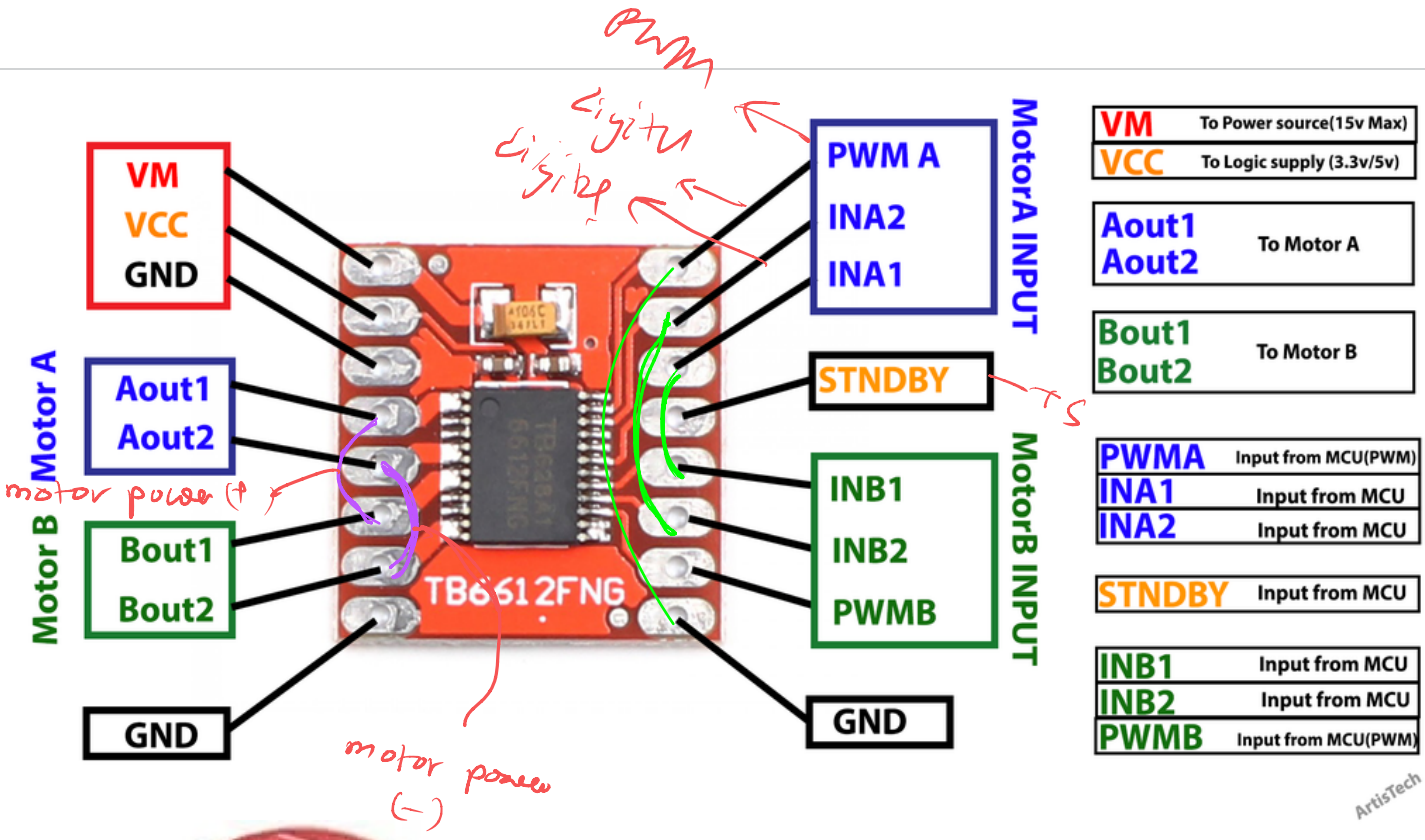

w.inst

?auto

%2F%2Fam-electronics-eg.

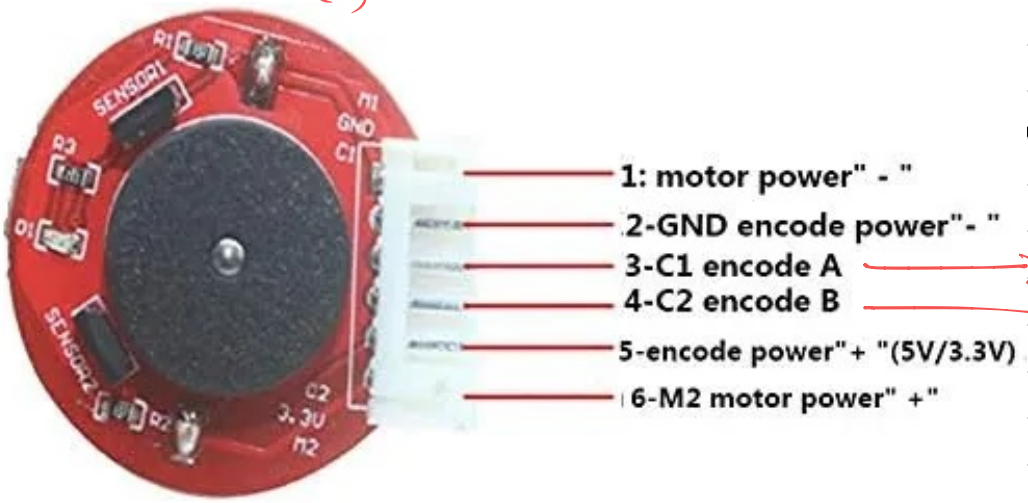

Wiring Method:

- red: motor power" + "
- black: encode power" - "
- yellow: Signal feedback
- green: Signal feedback
- blue: encode power"+"
- white: motor power" - "

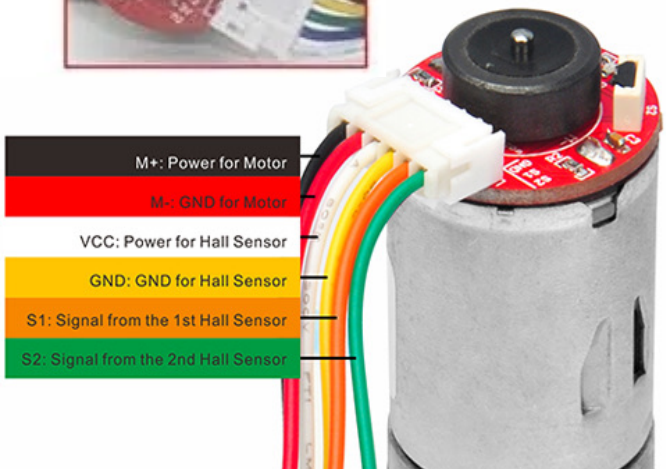

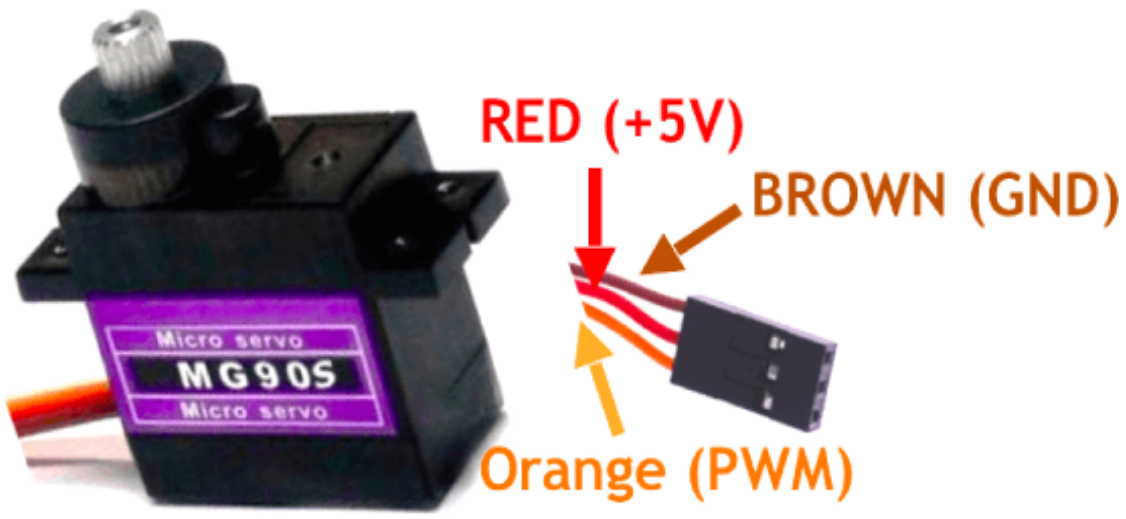
RED (+5V)
BROWN (GND)
Orange (PWM)
Micro servo
MG90S
Micro servo

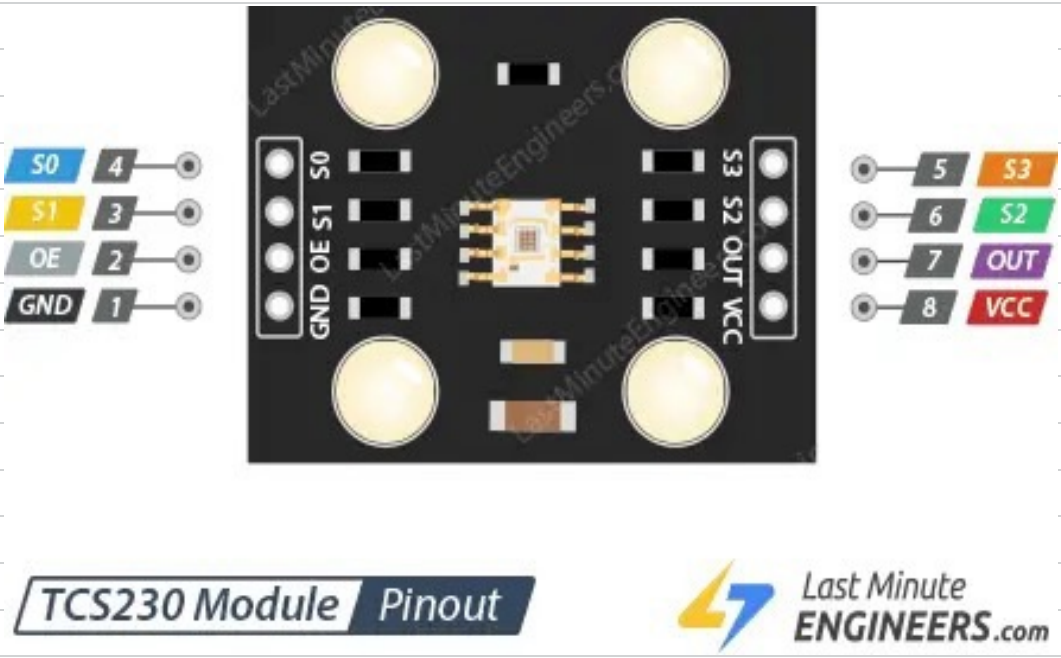
S0 4
S1 3
OE 2
GND 1
GND OE S1 S0
S3 S2 OUT VCC
5 S3
6 S2
7 OUT
8 VCC
TCS230 Module Pinout
Last Minute ENGINEERS.com

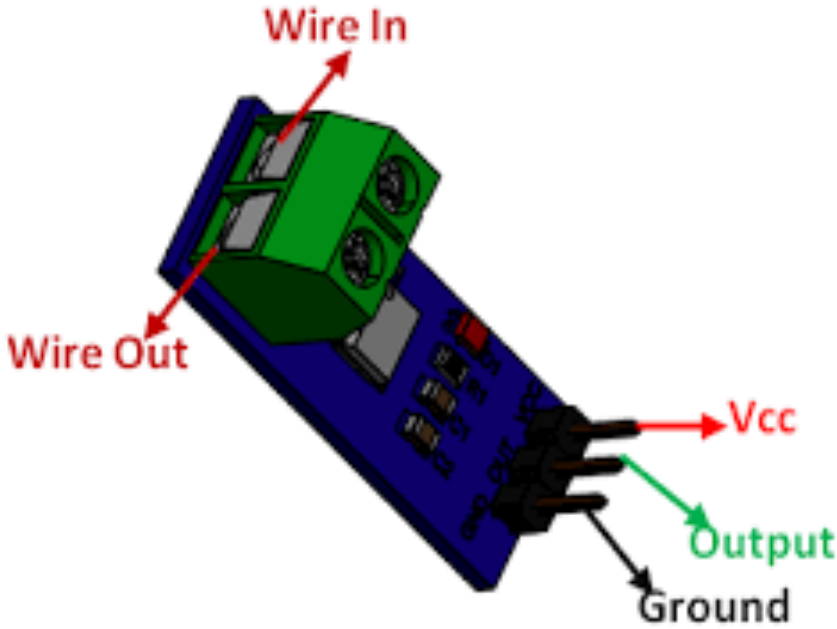
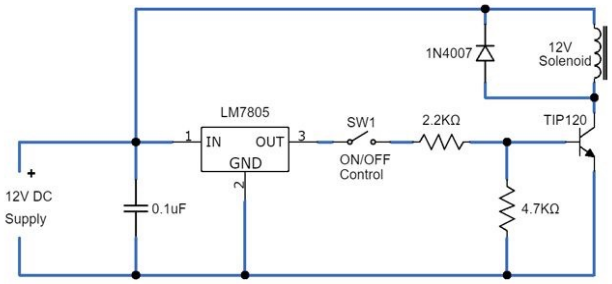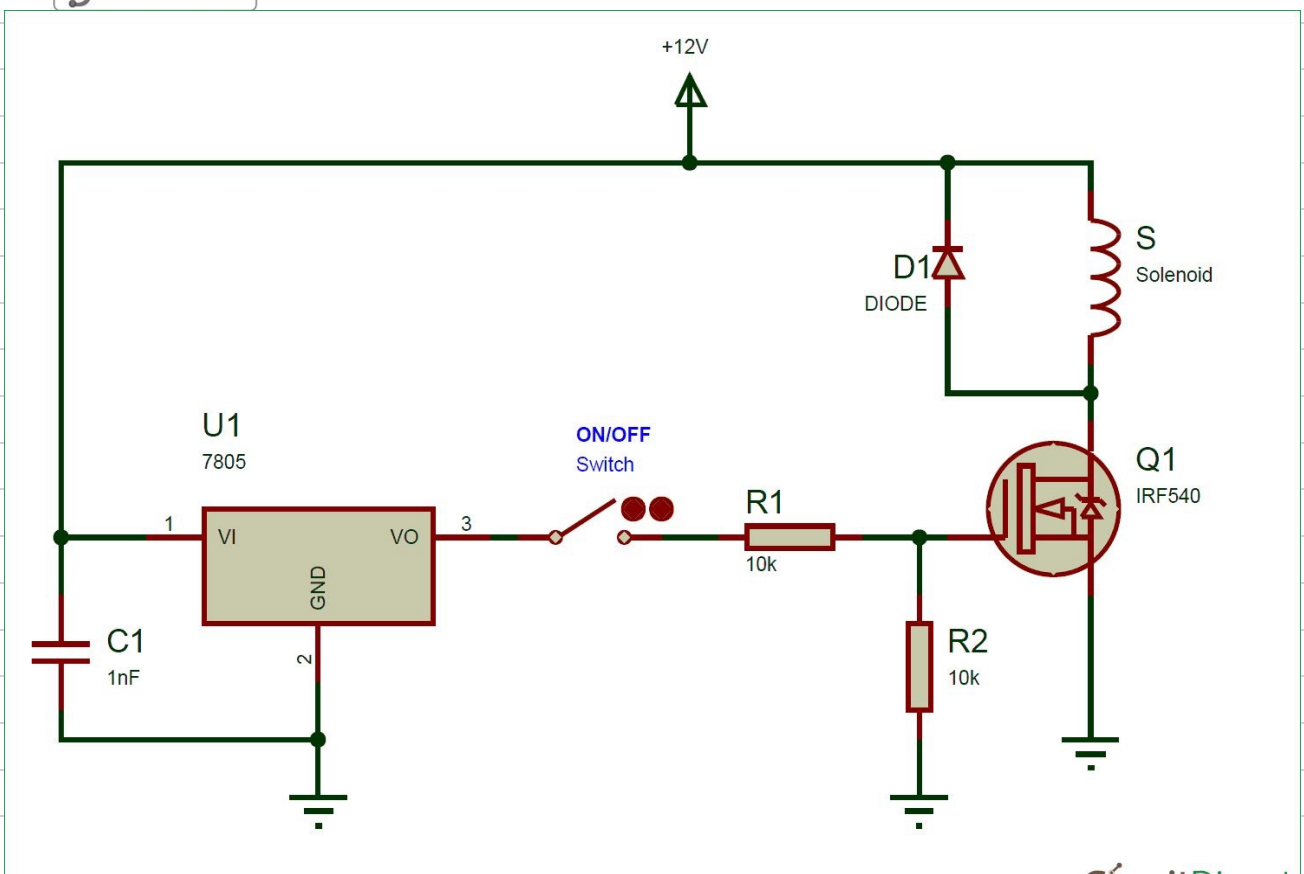
Solenoid Driver Circuit